PROPRIETARY RIGHTS ARE CLAIMED FOR THE MATERIAL DISCLOSED IN THIS DRAWING.

TYP. WALL THICKNESS = 2.5

LTR.	REVISIONS	DATE
A	REDRAWN TO AGREE WITH PARTS AS MFG'D	26NOV12

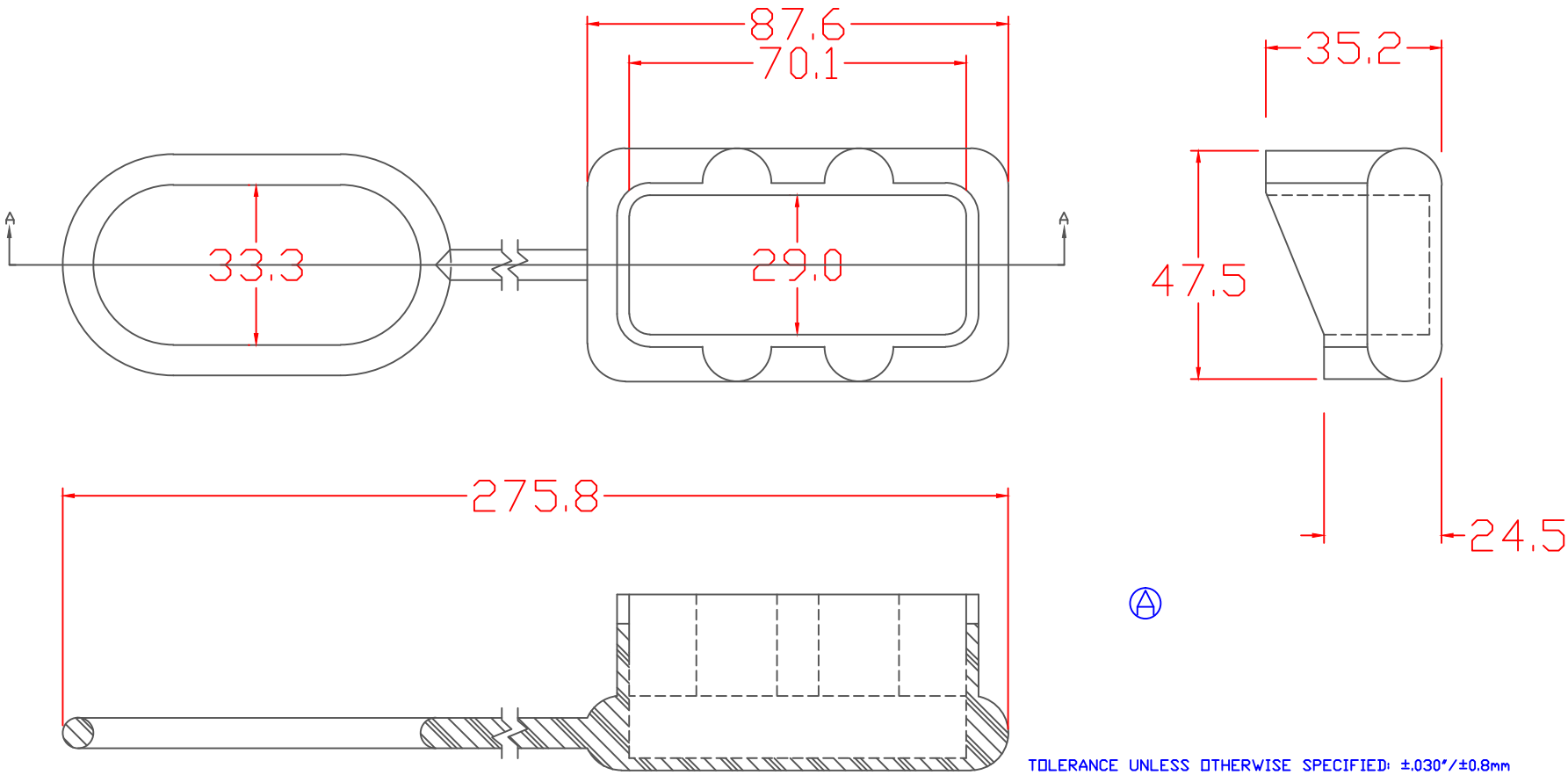

TOLERANCE UNLESS OTHERWISE SPECIFIED: ±.030"/±0.8mm
RADIAL DIAMETERS TO BE MEASURED OVER MANDRELS,
RING GAGES OR PIN GAGES OF SUITABLE SIZE

SECTION A-A

VTE Material Part No:	1101650102
Material:	RED PVC
Material Part No	9812-65-RED683
Max. Opertating Temp:	105 C
Shore Durometer	"A" 10 SEC. 67/62
Specific Gravity:	1.34
Ult. Elongation %:	475
Brittle Temp:	-44 C
Tensile Strength PSI:	1547 PSI
U.L. Rating:	94 V2
MEETS:	FMVSS.302

0 10 20 25.4
0 1/2" 1"
SCALE = FULL

VTE Incorporated
5437 Robinson Road, P.O. Box 790
Pellston, Michigan 49769
Telephone: 1-800-527-9256, 231-539-8000
FAX: 231-539-0914

REF:	DATE: 4-13-98	DRN BY: JC CHK'D BY:	WEIGHT: .16 LBS. / 70.9 G.
TITLE: ANDERSON/SME BATTERY CHARGER CONNECTOR COVER			
MATERIAL:		PART NO. 832NOV02	
COLOR:	DRG CLASS		